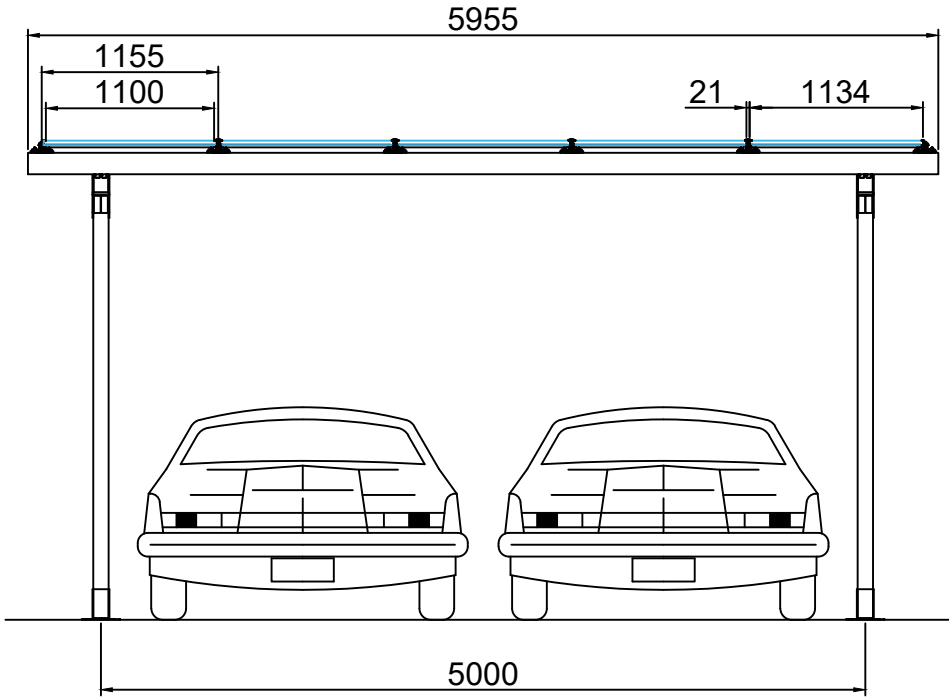

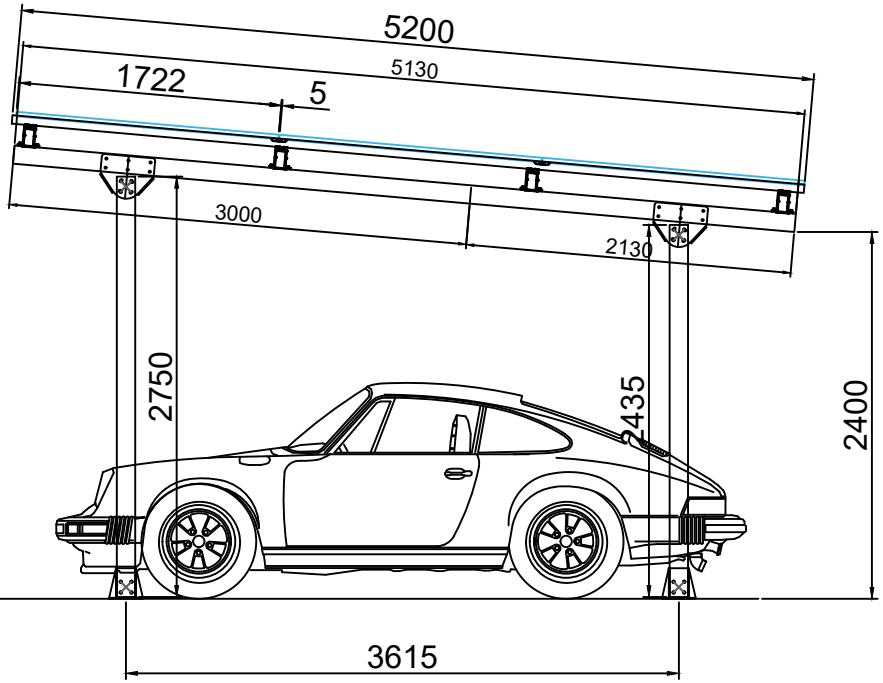

Technical information:
1.Module size is 1722x1134x30mm
2.Unit array is 3X5(15pcs)
3.Design wind speed is 35m/s
4.Design snow load is 0.75kN/m²

Drawing Name	Carport 3x5-For 2 cars without hidden drainage system					
Design		Date	Ver.	Paper	Scale	View
Check		2025.04.14	001	A4	1:1	

KSENG